NEFF

GAS HOB

[en] INSTRUCTION MANUAL

T26TA....., T27TA.....

T26TA49...

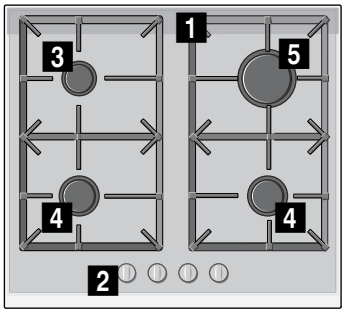

T27TA69...

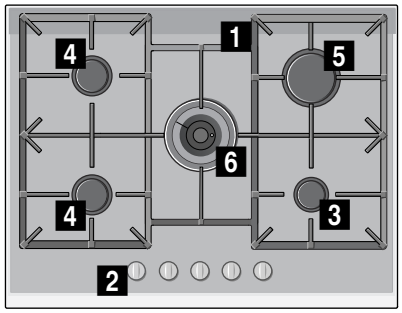

1 Pan supports
2 Control knobs
3 Economy burner with an output of up to 1.1 kW
4 Standard-output burner with an output of up to 1.9 kW
5 High-output burner with an output of up to 2.8 kW
6 Dual-wok burner with an output of up to 4.2 kW

Table of contents

Intended use 3

Important safety information 4

Getting to know your appliance 5
Controls and burners 5
Residual heat indicator. 6
Accessories 6

Gas burners 7
Switching on manually 7
Automatic ignition. 7
Safety system. 7
Switching off a burner 7
Warnings 7

Settings table and tips. 7
Suitable pans 7
Precautions for use 7
Table of cooking times. 8

Cleaning and maintenance 11
Cleaning. 11
Maintenance. 11

Trouble shooting 12

Customer service. 13
Warranty conditions 13

Environmental protection 13
Environmentally-friendly disposal 13

Additional information on products, accessories, replacement parts and services can be found at **www.neff-international.com** and in the online shop **www.neff-eshop.com**

Intended use

Read these instructions carefully. You will only be able to use your appliance safely and effectively when you have read them. These operating and installation instructions should be retained, and passed onto the buyer if the appliance is sold.

The manufacturer is exempt from all responsibility if the requirements of this manual are not complied with.

The images shown in these instructions are for guidance only.

Do not remove the appliance from its protective packaging until it is installed in the unit. Do not switch on the appliance if it is damaged in any way. Contact our Technical Assistance Service.

This appliance is class 3 type, according to the EN 30-1-1 regulation for gas appliances: built-in appliance.

Before installing your new hob, ensure that it is being installed according to the installation instructions.

This appliance cannot be installed on yachts or in caravans.

This appliance must only be used in well ventilated places.

This appliance is not intended for operation with an external clock timer or a remote control.

All operations relating to installation, connection, regulation and conversion to other gas types must be performed by an authorised technician, respecting all applicable regulations, standards and the specifications of the local gas and electricity suppliers. Special attention shall be paid to ventilation regulations.

This appliance leaves the factory set to the gas type that is indicated on the specifications plate. If this needs to be changed, please consult the assembly instructions. It is recommended you contact the Technical Assistance Service to change to another gas type.

This appliance has been designed for home use only, not for commercial or professional use. This appliance is only intended for

cooking purposes, not as a heating system. The warranty will only be valid if the appliance is used for the purpose for which it was designed.

This appliance is intended for use up to a maximum height of 2000 metres above sea level.

Do not use lids or hob guards for children which are not recommended by the hob manufacturer. They may cause accidents such as those due to the overheating, ignition or detachment of fragments of materials.

This appliance may be used by children over the age of 8 years old and by persons with reduced physical, sensory or mental capabilities or by persons with a lack of experience or knowledge if they are supervised or are instructed by a person responsible for their safety how to use the appliance safely and have understood the associated hazards.

Children must not play with, on, or around the appliance. Children must not clean the appliance or carry out general maintenance unless they are at least 15 years old and are being supervised.

Keep children below the age of 8 years old at a safe distance from the appliance and power cable.

⚠ Important safety information

⚠ Warning – Risk of deflagration!
Accumulation of unburned gas in an enclosed area carries a risk of deflagration. Do not subject the appliance to draughts. These might blow out the burners. Carefully read the instructions and warnings on the operation of gas burners.

⚠ Warning – Risk of poisoning!
The kitchen will become hot and humid and combustion products produced when this gas appliance is used. Make sure the kitchen is well ventilated, particularly when the hob is in operation: either keep the natural ventilation apertures open, or install a ventilation system (extractor hood). Intense prolonged use of the appliance may require additional or more effective ventilation: open a window or increase the power of the ventilation system.

⚠ Warning – Risk of burns!

- The burners and their immediate vicinity get very hot. Never touch the hot surfaces. Keep children under 8 years old well away from this appliance.
- If the liquefied gas bottle is not upright, liquefied propane/butane can enter the appliance. Intense darting flames may therefore escape from the burners. Components may become damaged and start to leak over time so that gas escapes uncontrollably. Both can cause burns. Always use liquefied gas bottles in an upright position.

⚠ Warning – Risk of fire!

- The cooking process must be supervised. A short cooking process must be supervised without interruption.
- The burners get very hot. Do not rest inflammable objects on the hob. Do not store objects on the hob.
- Do not store or use corrosive chemicals, products which produce fumes, inflammable materials or non-food products below or near this domestic appliance.
- Fat or oil which is overheated can catch fire easily. Never leave fat or oil to heat up unattended. If oil or fats do catch fire, never use water to put the fire out. Put the fire out by covering the pan with a lid and switch off the hotplate.

- Operating a burner with the power set too high will result in very high temperatures being generated. This may cause flammable materials to ignite. The power setting shown in the display may differ from the power setting that has been set using the knob. The power setting is shown in the display purely for additional information. Always set the power setting according to the printing on the knob.

⚠ Warning – Risk of injury!

- Cracks or fractures in the glass plate are dangerous. Shut immediately off all burners and any electrical heating element. Unplug the appliance from the mains or switch off the circuit breaker in the fuse box. Shut off the gas supply. Do not touch the appliance surface. Never switch on a faulty appliance. Contact the after-sales service.
- Pans which are damaged, are not the right size, hang over the edge of the hob or are not positioned correctly can cause serious injuries. Follow the advice and warnings provided relating to the cooking pans.
- Incorrect repairs are dangerous. Repairs may only be carried out, and damaged power and gas lines replaced, by an after-sales engineer trained by us. If the appliance is faulty, unplug the mains plug or switch off the fuse in the fuse box. Shut off the gas supply. Contact the after-sales service.
- If a control knob is too stiff to turn or it is loose, it must not be used. Contact our after-sales service immediately to have the control knob repaired or replaced.

⚠ Warning – Risk of electric shock!

- Do not clean the appliance using steam cleaners.
- Cracks or fractures in the glass plate could cause electric shocks. Switch off the circuit breaker in the fuse box. Contact the after-sales service.

Getting to know your appliance

You can find your appliance and the burner powers in the model overview. → *Page 2*

Controls and burners

Each control knob is marked with the burner it controls. You can use the control knobs to set the output required in each case to various positions between the maximum and the minimum settings. Never try to switch directly from position 0 to position 1 or from position 1 to position 0.

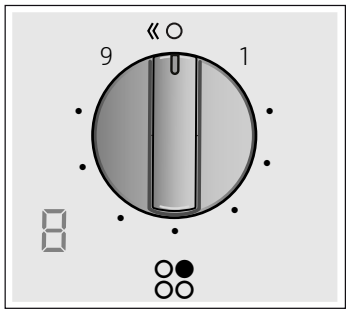

Indicators	
●○	Burner controlled by control knob
○	Switched-off burner
9	Highest power setting and electric ignition
1	Lowest power setting

Displays	
⌐	Electric ignition
9-1	Heat settings
0	Switched-off burner
H-h	Residual heat

For dual-wok burners, the inner and outer flames can be controlled separately. The available power levels are as follows:

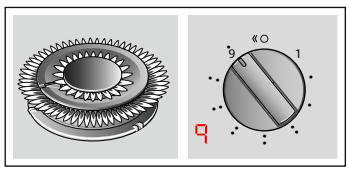

Inner and outer flame on full power.

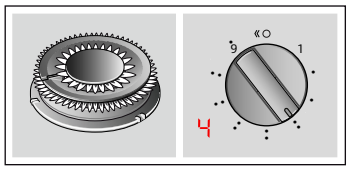

Outer flame on low power, inner flame on full power.

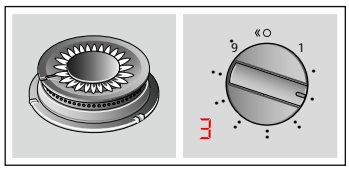

Inner flame on full power.

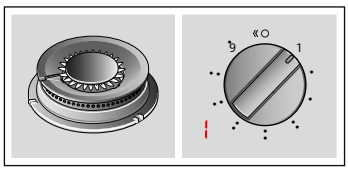

Inner flame on low power.

It is essential to ensure that all the burner parts and pan supports are correctly installed for the appliance to work correctly. Do not swap the burner caps around.

Always remove the pan supports carefully. When moving a pan support, the pan supports next to it may also move.

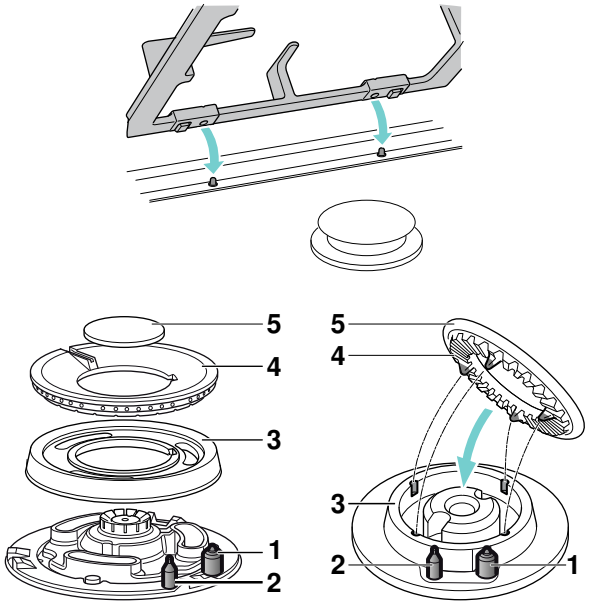

Burner parts	
1	Ignition plug
2	Thermocouple
3	Burner ring
4	Burner cup
5	Burner cap

Residual heat indicator

Every burner on the hob has a residual heat indicator that indicates whether it is hot or warm.

If H appears in the display the burner is still hot. As the burner cools down further, the display changes to h. The display remains lit until the burner has cooled sufficiently. Do not touch the respective burner if this indicator is lit.

Accessories

Depending on the model, the hob may include the following accessories. These can also be acquired from the Technical Assistance Service.

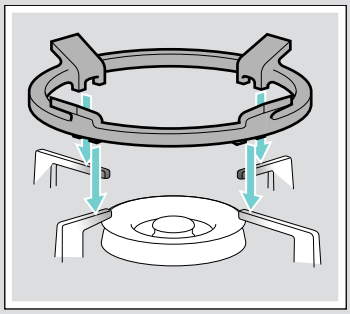

Additional wok grid
Only suitable for use on wok burners. Use cookware with a rounded base.

To extend the service life of the appliance, we recommend using the additional wok grid.

Additional espresso maker grid
Only suitable for use on the smallest burner. Use cookware with a diameter of less than 12 cm.

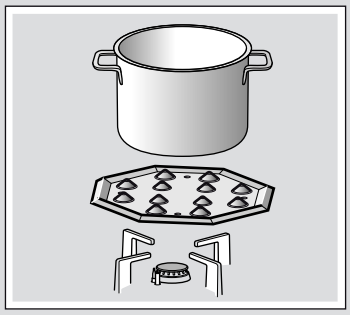

Simmer plate
This accessory part is only suitable for simmering. It can be used with the economy burner or the standard-output burner. If your hob has several standard-output burners, we recommend placing the simmer plate on the rear or front-right standard-output burner.

Place the accessory component with the projections facing upwards on the holder; never place it directly on the burner.

Code

Z2402X0	Additional espresso maker grid
Z2480X0	Simmer Plate

The manufacturer accepts no liability if these accessories are not used or are used incorrectly.

Gas burners

Switching on manually

1. Press the control knob for the selected burner and turn it anticlockwise to the highest power setting.
2. Hold an igniter or a naked flame (such as a lighter or a match) against the burner.

Automatic ignition

If the hob has automatic ignition (ignition plugs):

1. Press the control knob for the selected burner and turn it anticlockwise to the highest power level. While the control knob is held down, all the burners will generate sparks and the symbol will appear on the display. The flame ignites. Wait a few seconds.
2. Release the control knob.
3. Turn the control knob to the required position.

If the burner does not ignite, switch it off and repeat the steps described above. This time, hold the control knob down for longer (up to 10 seconds).

Warning – Risk of deflagration!
If the flame does not ignite after 10 seconds, switch off the burner and open a window or the door to the room. Wait at least one minute before switching the burner on again.

Note: It is important to keep the appliance clean. If the ignition plugs are dirty, this may cause ignition problems. Clean the ignition plugs regularly with a small, non-metallic brush. Take care to prevent the ignition plugs from suffering any heavy knocks.

Safety system

Your hob is equipped with a safety system (thermocouple) that cuts off the gas when the burners are accidentally switched off.

To ensure that this device is active:
1. Switch on the burner as usual.
2. Without releasing the control knob, press and hold it down firmly for 4 seconds after lighting the flame.

Switching off a burner

Turn the control knob clockwise to position 0. The 0 symbol will appear in the display and the residual heat indicator will appear after a few seconds.

A few seconds after the burner is switched off, a sound (thud) will be produced. This is not a fault - this means that the safety device is no longer operating.

Warnings

It is normal to hear a soft whistling noise while the burner is operating.

When first used, it is normal for the burner to give off odours. This does not pose any risk and does not indicate a malfunction. They will disappear in time.

An orange-coloured flame is normal. This is caused by the presence of dust in the atmosphere, spilt liquids, etc.

If the burner flames are accidentally blown out, switch off the burner operating control knob and do not try to relight it for at least 1 minute.

Settings table and tips

Suitable pans

Burner	Minimum diameter of the cookware base	Maximum diameter of the cookware base
Wok burner	22 cm	30 cm
High-output burner	20 cm	26 cm
Standard-output burner	14 cm	22 cm
Economy burner	12 cm	16 cm

The cookware must not overhang the edge of the hob.

Precautions for use

The following advice is intended to help you save energy and prevent pan damage:

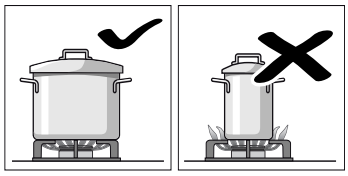

Use pans which are the right size for each burner. Do not use small pans on large burners. The flame must not touch the sides of the pan.

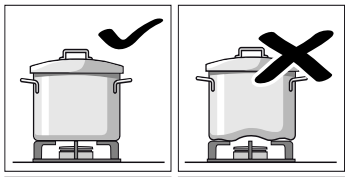

Do not use damaged pans, which do not sit evenly on the hob. Pans may tip over. Only use pans with a thick, flat base.

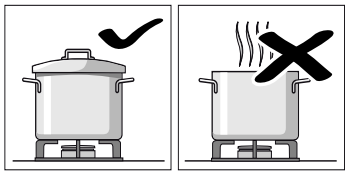

Do not cook without using a lid and make sure the lid is properly fitted. This wastes energy.

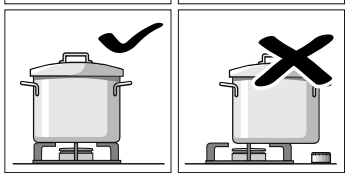

Always centre the pan over the burner, not to one side. Otherwise it could tip over. Do not place large pans on the burners near the control knobs. These may be damaged by the very high temperatures.

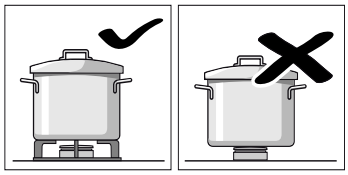

Place the pans on the pan supports, never directly on the burner.
Make sure that the pan supports and burner caps are correctly positioned before using the appliance.

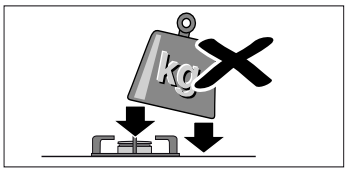

Pans should be placed on the hob carefully.
Do not strike the hob and do not place excessive weight on it.

Table of cooking times

The table below lists the optimal heat settings and cooking times for various types of food. The information given applies when cooking four portions.

The cooking times and heat settings may vary depending on the type of food, its weight and quality, on the type of gas used, and on the material from which the cookware is made. To prepare this dish, stainless steel cookware was mainly used.

Always use cookware that is the right size and place it in the centre of the burner. You can find information about the diameter of the cookware under → *"Suitable pans"*

Information on the table

Each type of food can be prepared in one or two steps. Each step contains information about the following:

- Cooking method
- Heat setting
- Cooking time in minutes

Cooking methods featured in the table

- Bringing to the boil
- Continuing cooking
- Building up pressure in the pressure cooker
- Maintaining pressure in the pressure cooker
- Frying on high heat
- Frying gently
- Melting, liquefying
- * Without lid
- ** Stirring constantly

Note: The symbols do not appear on the appliance. They are used here to represent the various cooking methods.

Information on how to cook food on the different burners is displayed. We recommend using the first burner that was mentioned. The model overview describes all of the burners on the hob.→ *Page 2*

Example:

Meal Burner	Total time in min.	Step 1			Step 2		
Soups, creamy soups							
Fish soup							
High-output burner	12-17		8	7-9		1	5-8
Standard-output burner	17-22		8	11-13		1	6-9
Wok burner	10-15		9	4-6		4	6-9

This example shows the preparation of fish soup using the high-output burner, the standard-output burner and the wok burner.

When using the high-output burner (recommended option), the total cooking time is between 12 and 17 minutes.

- Step 1: Bring to the boil. Set heat setting 8 for 7-9 minutes.
- Step 2: Continue boiling. Switch to heat setting 1 for 5-8 minutes.

This information also applies for the other suggested burners.

Meal Burner	Total time in min.	Step 1			Step 2		
Soups, creamy soups							
Fish soup							
High-output burner	12-17		8	7-9		1	5-8
Standard-output burner	17-22		8	11-13		1	6-9
Wok burner	12-17		9	7-9		4	5-8
Cream of pumpkin, borscht							
High-output burner	30-35		9	10-12		5	20-23
Standard-output burner	45-50		9	15-17		6	30-33
Wok burner	25-30		9	7-9		4	18-21
Minestrone (vegetable soup)							
High-output burner	47-52		9	10-12		5	37-40
Standard-output burner	57-62		9	10-12		6	47-50
Wok burner	45-50		8	8-10		4	37-40
Pasta and rice							
Spaghetti							
High-output burner	18-22	*	9	8-10		6	10-12
Standard-output burner	20-24	*	9	10-12		7	10-12
Wok burner	18-22	*	8	8-10		6	10-12
Rice							
High-output burner	17-22		9	5-7		2	12-15
Standard-output burner	18-23		9	7-9		6	11-14
Wok burner	13-18		8	4-6		4	9-12
Ravioli							
High-output burner	9-14		9	4-6		6	5-8
Standard-output burner	17-22		8	12-14		8	5-8
Wok burner	13-18		8	5-7		8	8-11

Meal Burner	Total time in min.	Step 1			Step 2		
Vegetables and pulses							
Boiled potatoes (mashed, potato salad)							
High-output burner	23-28		9	8-10		5	15-18
Standard-output burner	25-30		9	10-12		6	15-18
Wok burner	25-30		7	11-13		6	14-17
Hummus (puréed chickpeas)							
High-output burner	50-55		9	10-12		4	40-43
Standard-output burner	52-57		9	12-14		5	40-43
Wok burner	47-52		8	10-12		6	37-40
Mountain lentils							
High-output burner	40-45		9	8-10		8	32-35
Standard-output burner	50-55		9	18-20		6	32-35
Wok burner	45-50		7	20-22		5	25-28
Vegetables in tempura batter							
High-output burner	12-17	*	7	6-8	*	6	6-9
Standard-output burner	15-20	*	8	8-10	*	7	7-10
Wok burner	10-15	*	7	5-7	*	5	5-8
Sautéed fresh vegetables**							
Wok burner	6-8	*	9	6-8			
High-output burner	6-8	*	9	6-8			
Chips							
Wok burner	12-17	*	8	12-17			
High-output burner	15-20	*	9	15-20			
Standard-output burner	25-30	*	9	25-30			
Eggs							
Shakshuka, menemen							
Standard-output burner	15-20		9	10-12		4	5-8
High-output burner	13-18		8	7-9		3	6-9
Wok burner	15-20		6	11-13		4	4-7
Omelette (1 portion)							
Standard-output burner	3-5	*	8	3-5			
High-output burner	2-4	*	9	2-4			
Wok burner	2-4	*	5	2-4			

Meal Burner	Total time in min.	Step 1			Step 2		
Spanish tortilla							
High-output burner	25-30	*	9	25-30			
Wok burner	20-25	*	8	20-25			
Sauces							
Béchamel sauce**							
Economy burner	10-15	*	6	2-4	*	6	8-11
Standard-output burner	10-15	*	5	2-4	*	5	8-11
Wok burner	3-8	*	6	1-2	*	6	2-6
Blue cheese sauce**							
Economy burner	4-6	*	7	4-6			
Standard-output burner	3-5	*	7	3-5			
High-output burner	3-5	*	5	3-5			
Napoli sauce							
Standard-output burner	18-23	*	6	2-4	*	4	16-19
High-output burner	15-20	*	8	1-3	*	6	14-17
Wok burner	12-17	*	8	2-4	*	6	10-13
Carbonara sauce							
Standard-output burner	10-15	*	6	5-7	*	3	5-8
High-output burner	8-13	*	5	4-6	*	3	4-7
Economy burner	10-15	*	9	5-7	*	5	5-8
Fish							
Breaded hake							
High-output burner	5-10	*	8	5-10			
Standard-output burner	8-13	*	9	8-13			
Wok burner	5-10	*	7	5-10			
Baked salmon							
High-output burner	5-10	*	7	2-4		1	3-6
Standard-output burner	5-10	*	8	2-4		1	3-6
Wok burner	7-12	*	7	2-4		1	5-8
Mussels							
High-output burner	5-7		9	5-7			
Wok burner	4-6		9	4-6			
Standard-output burner	10-12		9	10-12			

Meal Burner	Total time in min.	Step 1			Step 2		
Meat							
Duck breast (1 portion)							
Standard-output burner	6-8	*	7	6-8			
High-output burner	9-11	*	7	9-11			
Wok burner	6-8	*	6	6-8			
Fillet of beef Stroganoff							
High-output burner	8-13	*	9	8-13			
Wok burner	5-10	*	8	5-10			
Standard-output burner	12-17	*	9	12-17			
Chicken escalope (8 chicken breast fillets)							
High-output burner	7-12	*	9	2-4	*	6	5-8
Wok burner	7-12	*	9	2-4	*	6	5-8
Standard-output burner	7-12	*	9	7-12			
Minced meat							
High-output burner	15-20	*	8	15-20			
Standard-output burner	20-25	*	9	20-25			
Wok burner	15-20	*	7	15-20			
Convenience products							
Frozen croquettes (16 pcs) Frozen fish fingers (12 pcs)							
High-output burner	6-10		8	6-10			
Standard-output burner	8-12		8	8-12			
Wok burner	6-10		9	3-5		4	3-5
Small sausages (12 pcs)							
High-output burner	5-10		9	1-3		7	4-7
Standard-output burner	7-12		9	7-12			
Wok burner	5-10		9	1-3		6	4-7
Boiled sausages (12 pcs)							
Standard-output burner	8-13		9	8-13			
Wok burner	9-14		5	9-14			
High-output burner	7-12		7	7-12			
Beefburger (4 pcs., 1 cm thick, 110 g)							
High-output burner	4-9	*	9	1-3	*	7	3-6
Wok burner	4-9	*	8	1-3	*	7	3-6

Meal Burner	Total time in min.	Step 1			Step 2		
Standard-output burner	5-10	*	9	1-3	*	8	4-7
Heat baked beans and keep them warm (use the simmer plate)							
Standard-output burner	20-22		6	5-7		1	15
Pizza (20 cm)							
Wok burner	4-8		4	4-8			
High-output burner	16-20		1	16-20			
Standard-output burner	20-25		1	20-25			
Desserts							
Rice pudding in accordance with DIN 3360-12* (use the simmer plate)							
Standard-output burner	62-67	**	8	27-32		2	35
Rice pudding**							
Standard-output burner	30-35	*	8	9-11	*	4	21-24
Economy burner	40-45	*	9	12-14	*	2	28-31
Wok burner	23-28	*	7	8-10	*	5	15-18
Melt chocolate in accordance with EN 60350-2 (use the simmer plate)							
Economy burner	34-38	*	1	34-38			
Standard-output burner	20-24	*	1	20-24			
Pancakes (8 pcs)							
Standard-output burner	17-22	*	8	3-5	*	5	50 s/ side
High-output burner	20-25	*	6	4-6	*	4	60 s/ side
Wok burner	15-20	*	4	3-5	*	4	40 s/ side
Bread pudding (in the bain marie)							
High-output burner	25-30		9	10-12		6	15-18
Wok burner	23-28		9	8-10		8	15-18
Standard-output burner	27-32		9	10-12		7	17-20
Custard**							
High-output burner	3-8	*	5	3-8			
Standard-output burner	8-13	*	5	8-13			
Wok burner	3-8	*	4	3-8			
Sponge (in the bain marie)							
High-output burner	35-40		9	35-40			
Wok burner	40-45		9	40-45			
Standard-output burner	45-50		9	45-50			

Cooking tips

- Use a pressure cooker to cook creamy soups and pulses. This significantly reduces the cooking time. If you are using a pressure cooker, follow the manufacturer's instructions. Add all of the ingredients at the start.
- Always use a lid when cooking potatoes and rice. This significantly reduces the cooking time. The water must be boiling before you add pasta, rice or potatoes. Then adjust the heat setting to continue boiling.
- For pan-cooked dishes, heat the oil up first. As soon as you have started the frying, keep the pan at a constant temperature by adjusting the heating setting as required. When preparing several portions, wait until the relevant temperature has been reached again. Turn the food regularly.
- When cooking soups, cream, lentils or chickpeas, add all of the ingredients to the cookware at the same time.

Cleaning and maintenance

Cleaning

Once the appliance is cool, use a sponge to clean it with soap and water.

After each use, clean the surface of the respective burner parts once they have cooled down. If any residue is left (baked-on food, drops of grease etc.), however little, it will become stuck to the surface and more difficult to remove later. The holes and grooves must be clean for the flame to ignite properly.

The movement of some pans may leave metal residue on the pan supports.

Clean the burners and pan supports using soapy water and scrub with a non-wire brush.

If the pan supports are fitted with rubber rests, ensure that these are also cleaned. The rests may come loose and the pan support may scratch the hob.

Always dry the burners and pan supports completely. Water droplets or damp patches on the hob at the start of cooking may damage the enamel.

After cleaning and drying the burners, make sure the burner caps are correctly positioned on the diffuser.

Caution!

- Do not remove the control knobs when cleaning the appliance. The appliance may be damaged if moisture finds its way inside.
- Do not use steam cleaners. This could damage the hob.
- Never use abrasive products, steel scourers, sharp implements, knives, etc. to remove bits of hardened food from the hob.
- Do not use knives, scrapers or similar implements to clean the point where the glass meets the burner trims, the metal frames or the glass/aluminium panels, if fitted.

Maintenance

Always clean off any liquid as soon as it is spilt. This will prevent food remains from sticking to the hob surface and you will save yourself any unnecessary effort.

Never slide pans across the glass surface, as you may scratch it. In addition, try not to drop heavy or sharp objects on the glass. Never strike any part of the hob.

Grains of sand that may come from cleaning fruits and vegetables will scratch the glass surface.

Melted sugar, or foods which contain a lot of sugar which may have spilt, should be cleaned off the hob immediately, using the glass scraper.

Trouble shooting

Sometimes certain faults detected can be easily resolved. Before calling the Technical Assistance Service, bear in mind the following advice:

Fault	Possible cause	Remedial action
Electrical operation is generally impaired.	Defective circuit breaker.	Check inside the fuse box to see if any of the fuses are damaged. Replace if necessary.
	The circuit breaker or one of the residual-current circuit breakers has been triggered.	Check the control panel to see if the automatic circuit breaker or a fault current switch has failed.
Automatic ignition is not working.	There may be remnants of food or cleaning agent residues trapped between the ignition plugs and the burners.	The spaces in between the ignition plugs and the burners must be clean.
	The burners are wet.	Carefully dry the burner caps.
	The burner caps have not been fitted correctly.	Make sure that the caps have been fitted correctly.
	The appliance is not earthed or has not been connected correctly, or the earth cable is damaged.	Contact an electrician.
Automatic ignition is not working and the F 1 or F2 symbol appears in the display.	The electronics have overheated.	Switch the burners off or use only the lowest heat setting until the electronics have cooled down sufficiently.
The burner flame is uneven.	The burner parts have not been fitted correctly.	Fit the burner parts to the relative burner correctly.
	The burner slots are dirty.	Clean the burner slots.
The gas does not appear to be flowing correctly or there is no gas being produced at all.	The gas supply has been shut off by the intermediate valves.	Open the intermediate valves.
	If gas is supplied by a gas cylinder, check that this is not empty.	Replace the gas cylinder.
There is a smell of gas in the kitchen.	The gas tap is open.	Close the gas tap.
	The gas cylinder has not been connected correctly.	Make sure that the gas cylinder has been connected correctly.
	Gas may be leaking.	Close the central tap in the gas line, ventilate the room and immediately call an authorised installer, who can inspect the gas system and issue an installation certificate. Do not use the appliance until you are sure that gas is not leaking from the system or the appliance.
The burner switches off as soon as the control knob is released.	The control knob was not held down for long enough.	If the burner is switched on, hold the control knob down for a few seconds longer.
	The burner slots are dirty.	Clean the burner slots.
F3, F4, F5, F6, F7, F8, F9 appear in the display.	Electronics fault.	Disconnect the hob from the power supply. Wait a few seconds and then reconnect it. If the indicator remains lit, contact the after-sales service.
The heat setting indicator in the display continually deviates from the heat setting that was selected using the control knob.	Incorrect calibration of the electronics.	Carry out the calibration in accordance with the installation instructions.

Customer service

When contacting our Technical Assistance Service, please provide the product number (E-Nr.) and production number (FD) of the appliance. This information is given on the specifications plate located on the lower section of the hob and on the label in the user manual.

Please find the contact data of all countries in the enclosed customer service list.

To book an engineer visit and product advice

GB 0344 892 8989
Calls charged at local or mobile rate.

IE 01450 2655
0.03 € per minute at peak. Off peak 0.0088 € per minute.

Rely on the professionalism of the manufacturer. You can therefore be sure that the repair is carried out by trained service technicians who carry original spare parts for your appliances.

Warranty conditions

In the unlikely event that the appliance is damaged or does not meet your expectations in terms of quality, please inform us as soon as possible. For the warranty to be valid, the appliance must not have been tampered with, or used inappropriately.

The applicable warranty conditions are those set out by the company's representative office in the country of purchase. Detailed information is available from retail outlets. Proof of purchase must be presented to obtain the benefits of the warranty.

We reserve the right to introduce changes.

Environmental protection

If the symbol is shown on the specifications plate, bear in mind the following instructions:

Environmentally-friendly disposal

Dispose of packaging in an environmentally-friendly manner.

This appliance is labelled in accordance with European Directive 2012/19/EU concerning used electrical and electronic appliances (waste electrical and electronic equipment - WEEE). The guideline determines the framework for the return and recycling of used appliances as applicable throughout the EU.

The packaging of your appliance has been manufactured using only the materials which are strictly necessary to guarantee efficient protection during transport. These materials are 100% recyclable, thus reducing the environmental impact. You can also contribute to caring for the environment by following the advice below:

- Dispose of the packaging in the appropriate recycling bin.
- Before you get rid of an old appliance, make sure you disable it. Contact your local authority to find out the address of your nearest recycling centre to dispose of your appliance.
- Do not pour used oil down the sink. Collect it in a sealed container and take it to an appropriate collection point or, failing that, place it in the rubbish bin (it will end up in a controlled dump; this is probably not the best option, but it will avoid contaminating ground water).

REGISTER YOUR PRODUCT
ONLINE NEFF-HOME.COM

Constructa NEFF Vertriebs-GmbH |
Carl-Wery-Straße 34 | 81739 Munich | Germany

9001133323
990117(H)
en